The product using material and processing must conform to the "WI-PZ-001"HSF technical standard control requirements

RoHS

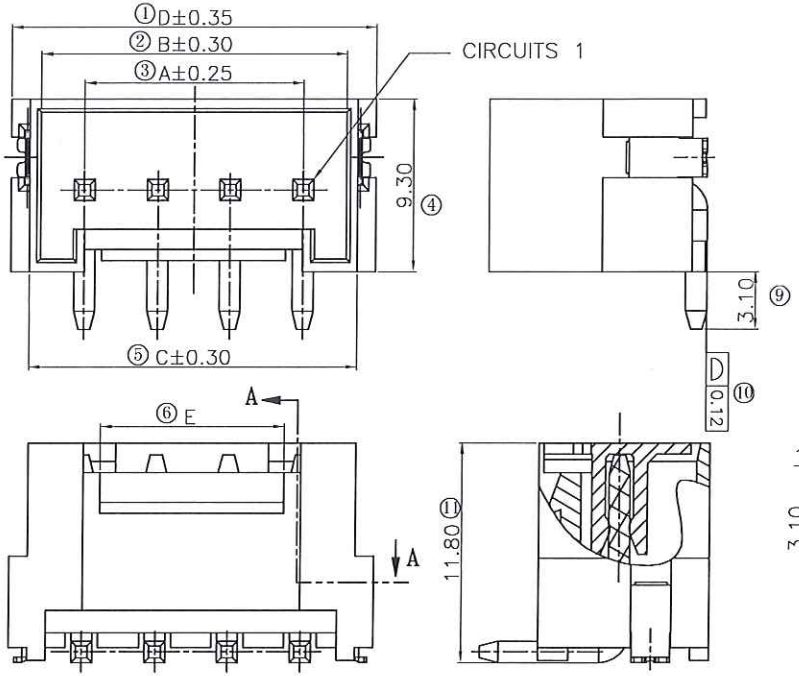

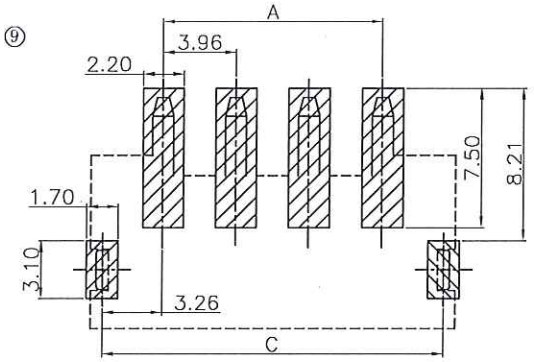

RECOMMENDED PCB LAYOUT
(GENERAL TOLERANCE:±0.05)

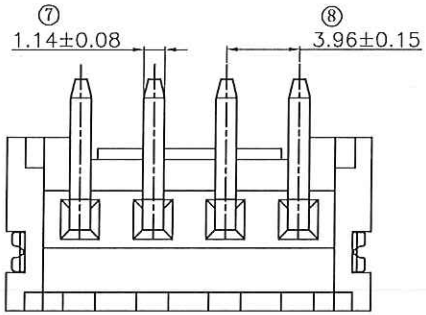

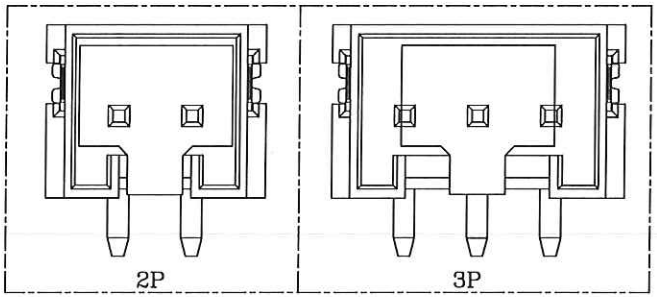

NOTE:
1.MATERIAL SPECIFICATION:
1-1.HOUSING: LCP,UL94V-0
1-2.CONTACTS: BRASS
2.PLATING SPECIFICATION:
2-1.CONTACTS:
TIN PLATED
3.ELECTRICAL PERFORMANCE:
3-1.CURRENT RATING: 7A
3-2.CONTACT RESISTANCE: 20 mΩ MAX
3-3.INSULATION RESISTANCE: 1000MΩ Min
3-4.DIELECTRIC WITHSTANDING : 1500V
4.ENVIRONMENTAL PERFORMANCE:
4-1.OPERATING TEMPERATURE: -25°C~+85°C.
5.PACKAGE SPEC: REEL
6.P/N:

A3962 W 0-1 XX 2 X X X A1

SERIES NO:
CONNECTOR: W-WAFER
ANGLE: 0-180°
ROW NO: 1-SINGLE ROW
PIN Q'PY: 02~16
TERMIPOINT: 2-SMT
PLATING: C-BRIGHT TIN
COLOR: S-NATURE
WATER CODE 0-N/A

Circuits	Dimensions(mm)				
	A	B	C	D	E
02	3.96	8.68	10.18	11.84	3.88
03	7.92	12.64	14.14	15.8	7.84
04	11.88	16.6	18.1	19.76	
05	15.84	20.56	22.06	23.72	
06	19.8	24.52	26.02	27.68	
07	23.76	28.48	29.98	31.64	
08	27.72	32.44	33.94	35.6	
09	31.68	36.4	37.9	39.56	
10	35.64	40.36	41.86	43.52	10.00
11	39.6	44.32	45.82	47.48	
12	43.56	48.28	49.78	51.44	
13	47.52	52.24	53.74	55.4	
14	51.48	56.2	57.7	59.36	
15	55.44	60.16	61.66	63.32	
16	59.4	64.12	65.62	67.28	

REV.	REVISION RECORD	DATE
A0	NEW RELEASE	21.10.15
A1	PART NUMBER RENEWAL	

GENERAL TOLERANCES	
LINEAR	ANGLES
0.0±0.35	X°REF±6°
0.00±0.25	X°±3°
0.000±0.10	X°X' ±2°

UNIT: mm
SIZE: A4

SCALE: 1:1	NAME	DATE
APPROVED	王[illegible]	2024.6.4
DESIGNER	梁林秋	2024.6.4
DRAWN	肖雨曦	2024.6.4

PART.NO: A3962W0-1XX2XXX

DWG.NO: ENDE05

TITLE: Pitch 3.96mm 180° 单排立贴 Wafer

万连科技
WanLian Technology Co., Ltd

REV: A1

SHEET: 1/2

义乌万连科技有限公司
2024.06.04
产品中心
技术文件发行章

The product using material and processing must conform to the "WI-PZ-001"HSF technical standard control requirements

RoHS

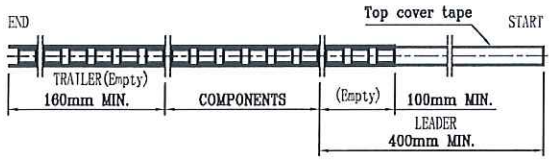

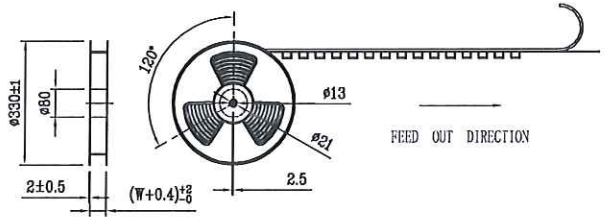

NOTE(注):

1. 10 SPROCKET HOLE PITCH CUMULATIVE TOLERANCE ±0.2mm.
(10片孔距累积公差±0.2mm.)
2. CARRIER CAMBER NOT TO EXCEED 1mm IN 100mm.
(载带拱/弧形MAX:1/100mm.)
3. ALL DIMENSIONS MEET EIA-481 REQUIREMENTS.
(所有的尺寸要满足协会EIA-481规范.)
4. MATTRIAL:CLEAR ANTISTATIC PS.(载带材料：透明抗静电 PS.)
5. THICKNESS:0.40±0.05mm.(载带厚度：0.40±0.05mm.)
6. PACKING LENGHT PER REEL: 7.6 METERS.(每卷包装长度：7.6米.)
7. COMPONENT LOAD PER REEL: 600 PCS.(每卷包装数量：600只，前后各空包16只.)
8. Carton packing to no more than the line, using the free slots filled with plastic foam and nylon.(纸箱装箱以不超过装箱线为准,空余位置用塑料泡沫及保尼龙填充.)
9. 纸箱分小、中、标准型3种规格型号：装箱为整箱(左下包装量)采用标准型纸箱包装，未达到整箱数量以产品量适当采用小型或中型纸箱包装.)

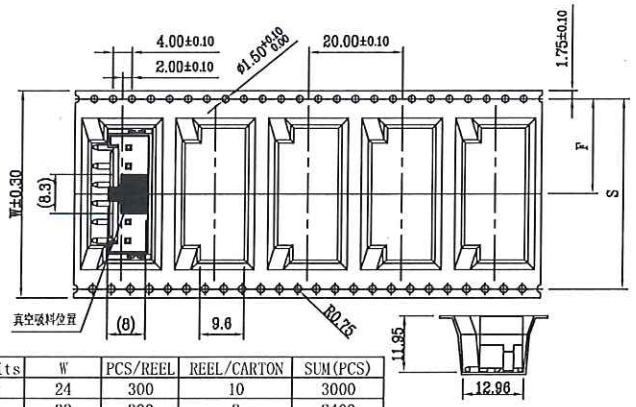

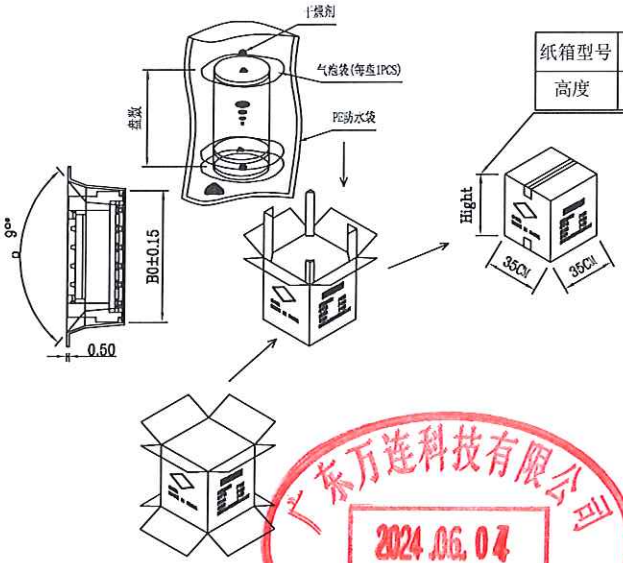

纸箱型号	小型	中型	标准型
高度	7.5	15	32

Circuits	W	PCS/REEL	REEL/CARTON	SUM(PCS)
02	24	300	10	3000
03	32	300	8	2400
04	44	300	6	1800
05		300	6	1800
06		300	6	1800
07	56	300	4	1200
08		300	4	1200
09		300	4	1200
10	72	300	3	900
11		300	3	900
12		300	3	900
13		300	3	900
14	88	300	3	900
15		300	3	900
16		300	3	900

Circuits	B0	W	F	S
02	12.18	24	11.50	/
03	16.14	32	14.20	28.40
04	20.10	44	20.20	40.40
05	24.06			
06	28.02			
07	31.98	56	26.20	52.40
08	35.94			
09	39.9			
10	43.86	72	34.20	68.40
11	47.82			
12	51.78			
13	55.74			
14	59.7	88	42.20	84.40
15	63.66			
16	67.62			

广东万连科技有限公司
2024.06.04
产品中心
技术文件发行章

REV.	REVISION RECORD	DATE
A0	NEW RELEASE	21.10.15
A1	PART NUMBER RENEWAL	

GENERAL TOLERANCES	
LINEAR	ANGLES
0.0±0.35	X°REF±6°
0.00±0.25	X°±3°
0.000±0.10	X°X' ±2°

UNIT: mm
SIZE: A4

SCALE: 1:1	NAME	DATE
APPROVED	王小强	2024.6.4
DESIGNER	梁林积	2024.6.4
DRAWN	肖雨曦	2024.6.4

PART.NO: A3962W0-1XX2XXX

DWG.NO: ENDE05

TITLE: Pitch 3.96mm 180° 单排立贴 Wafer

万连科技 WanLian Technology Co., Ltd

REV: A1

SHEET: 2/2