The product using material and processing must conform to the "WI-PZ-001"HSF technical standard control requirements

ROHS

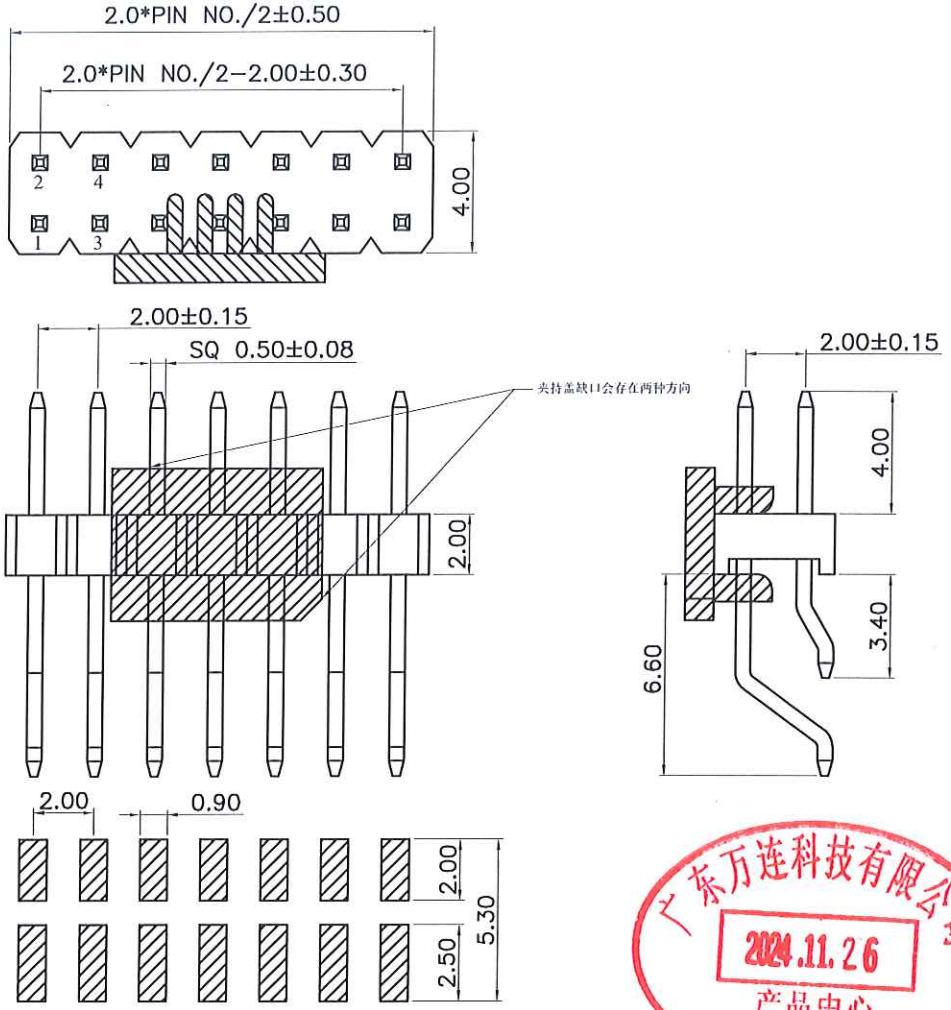

RECOMMENDED P.C.B LAYOUT
P.C.B TOLERANCE:±0.05

NOTE:
1.MATERIAL SPECIFICATION:
1-1.HOUSING: PA6T,UL94V-0
1-2.CONTACTS: BRASS
2.PLATING SPECIFICATION:
2-1.CONTACTS:
GOLD FLASH OVER NICKEL
3.ELECTRICAL PERFORMANCE:
3-1.CURRENT RATING: 2A
3-2.CONTACT RESISTANCE: 30 mΩ MAX
3-3.INSULATION RESISTANCE: 1000MΩ Min
3-4.DIELECTRIC WITHSTANDING : 300V
4.ENVIRONMENTAL PERFORMANCE:
4-1.OPERATING TEMPERATURE: -40°C~+105°C.
5.PACKAGE SPEC: REEL
6.P/N:

PH2005 20 M 9-2 XX 2 X X X 03

- SERIES NO: PH2005
- HEIGHT: 20: 2.0mm
- MALE FEMALE: M-MALE
- ANGLE: 9-90~
- ROW NO: 2-DOUBLE ROW
- PIN Q'PY: 04~80
- TERMIPOINT: 2-SMT
- PLATING: A-ALL AU G/F
- COLOR: A-BLACK
- HOUSING: 1-PA6T

广东万连科技有限公司
2024.11.26
产品中心
技术文件发行章

REV.	REVISION RECORD	DATE
A0	NEW RELEASE	

GENERAL TOLERANCES		
	LINEAR	ANGLES
	0.0±0.35	X°REF±6°
UNIT: mm	0.00±0.25	X°±3°
SIZE: A4	0.000±0.10	X°X' ±2°

SCALE: 1:1	NAME	DATE
APPROVED	[illegible]	24.11.26
DESIGNER	[illegible]	24.11.26
DRAWN	黄[illegible]	24.11.26

PART.NO: PH200520M9-2XX2XXX03

DWG.NO: ENDE05

万连科技
WanLian Technology Co., Ltd

TITLE: 2.0双排针H2.0W4.0 2xNP 卧贴+CAP

REV: A0

SHEET: 1/2

The product using material and processing must conform to the "WI-PZ-001"HSF technical standard control requirements

ROHS

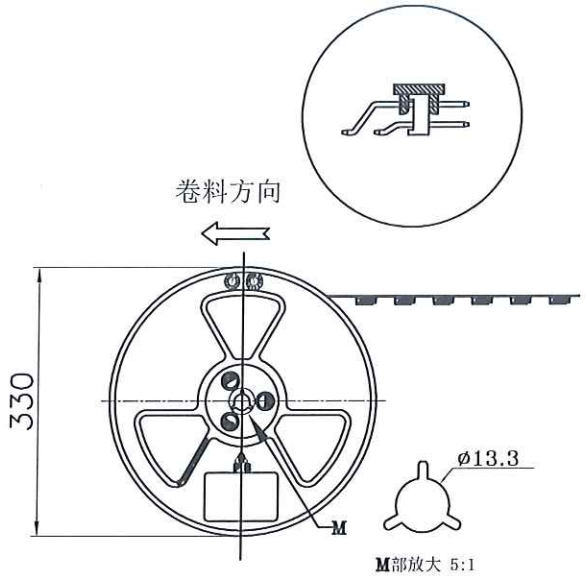

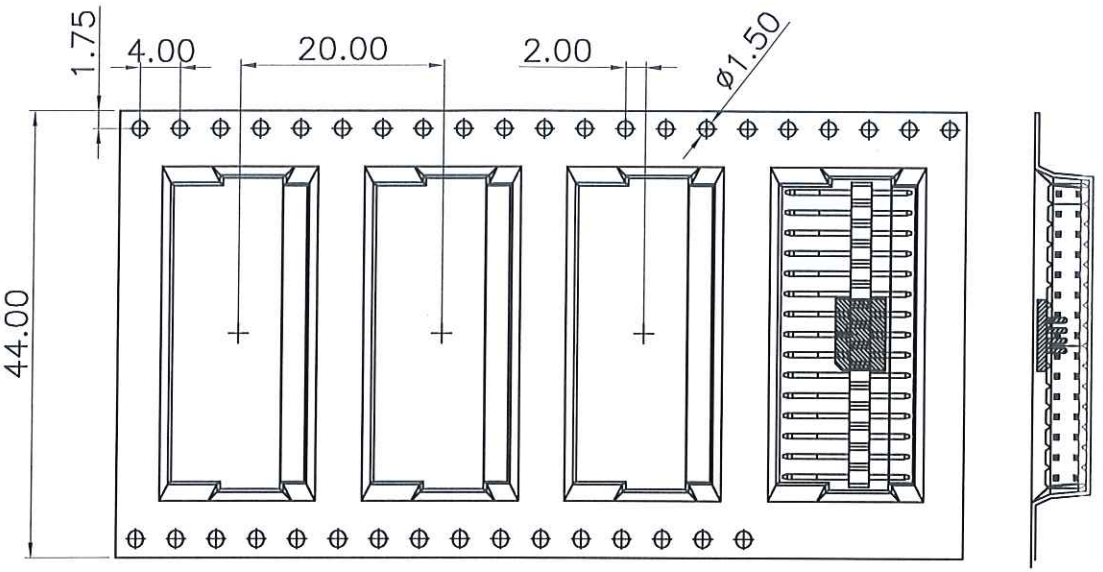

載带引出方向

NOTE:

1、成品组装完并OQ检查完后、将其装入承载带内、同时用封装胶带冷封
2、检查REEL板状卷带是否松动，如有松动需要重新贴紧
3、全检OK后、将REEL装盘入PE袋并放入一包干燥剂
4、每个REEL上必须贴上料号以及数量
5、产品放入REEL时前后各空15PCS不放产品
6、每盘装产品600PCS，每箱装5盘，每一外箱装产品600*5=3000PCS
7、保护带:材质为PET;透明色;
8、上带:材质为PET;透明色;冷封自粘带
9、Reel卷盘:PS材质;蓝色

广东万连科技有限公司 2024.11.26 产品中心 技术文件发行章

REV.	REVISION RECORD	DATE
A0	NEW RELEASE	

GENERAL TOLERANCES	
LINEAR	ANGLES
0.0±0.35	X°REF±6°
0.00±0.25	X°±3°
0.000±0.10	X°X' ±2°

UNIT: mm
SIZE: A4

SCALE: 1:1	NAME	DATE
APPROVED		24.11.26
DESIGNER		24.11.26
DRAWN	黄春辉	24.11.26

PART.NO: PH200520M9-2XX2XXX03

DWG.NO: ENDE05

TITLE: 2.0双排针H2.0W4.0 2x15P 卧贴+CAP包装图

万连科技 WanLian Technology Co., Ltd

REV: A0

SHEET: 2/2