The product using material and processing must conform to the "WI-PZ-001"HSF technical standard control requirements

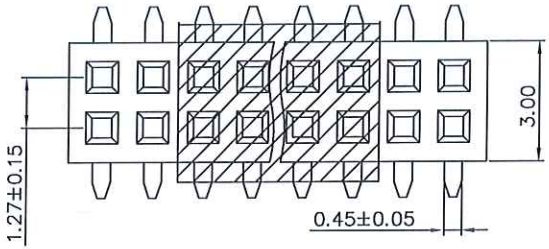


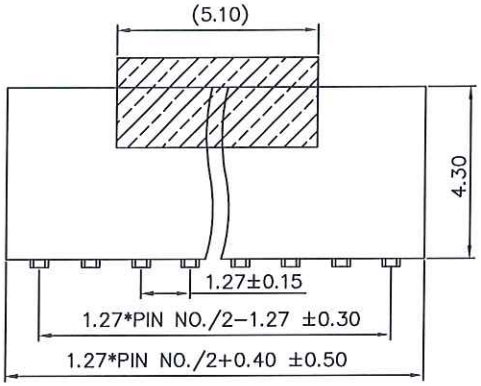


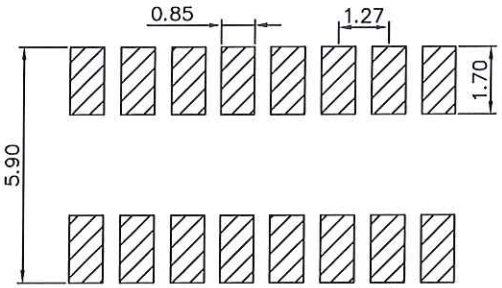


RECOMMEND P.C.B LAYOUT

PCB TOLERANCE: ±0.05 (TOP VIEW)

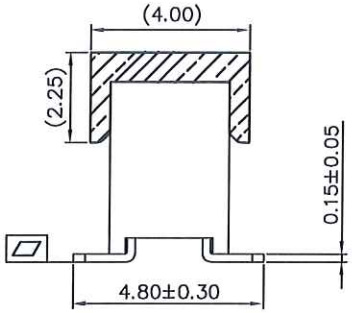


| | |
|---|---|
| 2*2～2*15P | 0.10 |
| 2*16～2*20P | 0.12 |
| 2*21～2*40P | 0.15 |

广东万连科技有限公司
2025.01.16
产品中心
技术文件发行章

RoHS

NOTE:
1.MATERIAL SPECIFICATION:
1-1.HOUSING: THERMOPLASTIC HIGH TEMP,UL94V-0
1-2.CONTACTS: PHOSPHOR BRONZE A1
2.PLATING SPECIFICATION:
2-1.CONTACTS:
TIN/GOLD FLASH PLATED OVER ALL.
3.ELECTRICAL PERFORMANCE:
3-1.CURRENT RATING: 1A AC/DC
3-2.CONTACT RESISTANCE: 20 mΩ MAX
3-3.INSULATION RESISTANCE: 1000MΩ Min
3-4.DIELECTRIC WITHSTANDING : 300V
4.ENVIRONMENTAL PERFORMANCE:
4-1.OPERATING TEMPERATURE: -40°C~+105°C.
5.PACKAGE SPEC: REEL
6.P/N:

FH1276 43 F 0-2 XX 2 X X X 06

SERIES NO:
HEIGHT:
43: 4.3mm
MALE FEMALE:
F-FEMALE
ANGLE:
0-180°
ROW NO:
2-DOUBLE ROW
PIN Q'PY:
04~60
TERMIPOINT:
2-SMT
PLATING:
A-ALL AU G/F
P-1U AU(触点足1U)
COLOR:
A-BLACK
HOUSING:
2-PA9T

| REV. | REVISION RECORD | DATE |
|---|---|---|
| A0 | NEW RELEASE | 22.05.09 |
| A1 | UPDATE TERMINAL MATERIAL | 25.01.06 |
| | | |
| | | |

| GENERAL TOLERANCES | |
|---|---|
| LINEAR | ANGLES |
| 0.0±0.35 | X°REF±6° |
| 0.00±0.25 | X°±3° |
| 0.000±0.10 | X°X' ±2° |

UNIT: mm
SIZE: A4

| SCALE: 1:1 | NAME | DATE |
|---|---|---|
| APPROVED | | 25.1.16 |
| DESIGNER | | 25.01.16 |
| DRAWN | 黄冬娟 | 25.01.16 |

PART.NO: FH127643F0-2XX2XXX06

DWG.NO: ENDE05

TITLE: 1.27mm Pitch 双排排针 SMT H4.3 W3.0

万连科技 WanLian Technology Co., Ltd

REV: A0

SHEET: 1/1

The product using material and processing must conform to the "WI-PZ-001"HSF technical standard control requirements

RoHS

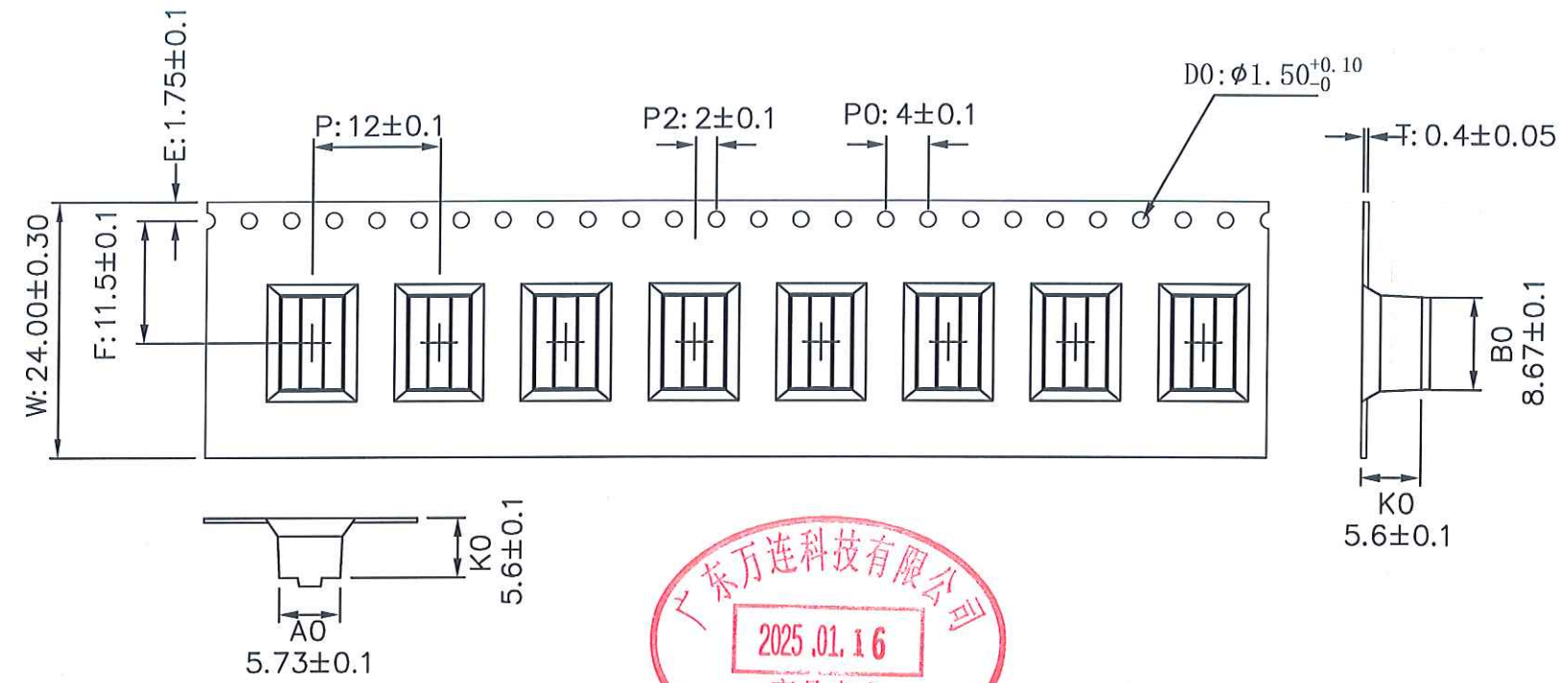


广东万连科技有限公司
2025.01.16
产品中心
技术文件发行章

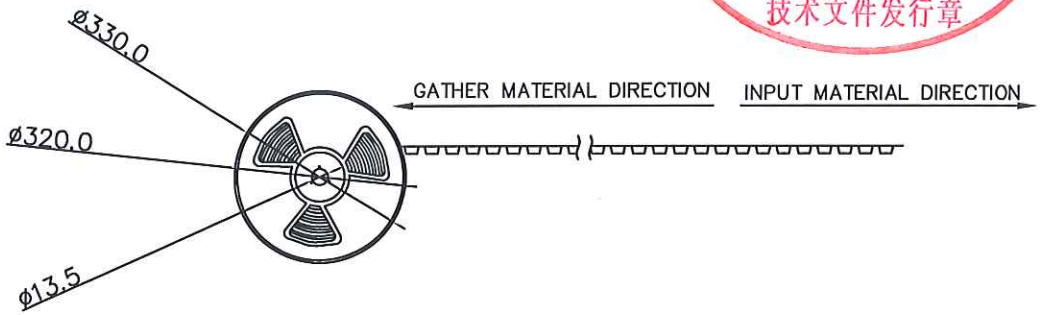


NOTES:
1.ALL DIMENSIONS MEET EIA-481-B REQUIREMENTS.
2.MATERIAL: BLACK PS
3.CARRIER CAMER NOT TO EXCEED 1mm IN 250mm.
4.AO AND BO MEASURED ON A PLANE 0.3mm ABOVE THE BOTTOM OF THE POCKET.
5.KO MEASURED FROM A PLANE ON THE INSIDE BOTTOM OF THE POCKET TO THE TOP SURFACE OF THE CARRIER.
6.QUANTITY: 800PCS.(LENGTH: 10.08m)
7.THICKNESS: 0.3± 0.05mm.
8.REEL: 13"

| REV. | REVISION RECORD | DATE |
|---|---|---|
| A0 | NEW RELEASE | 22.05.09 |
| A1 | UPDATE TERMINAL MATERIAL | 25.01.06 |

| GENERAL TOLERANCES | | |
|---|---|---|
| | LINEAR | ANGLES |
| | 0.0±0.35 | X°REF±6° |
| UNIT: mm | 0.00±0.25 | X°±3° |
| SIZE: A4 | 0.000±0.10 | X°X' ±2° |

| SCALE: 1:1 | NAME | DATE |
|---|---|---|
| APPROVED | [illegible] | 25.1.16 |
| DESIGNER | [illegible] | 25.01.16 |
| DRAWN | 黄[illegible] | 25.01.16 |

PART.NO: FH127643F0-2122XXX06

DWG.NO: ENDE05

万连科技 WanLian Technology Co., Ltd

TITLE: 1.27mm Pitch 双排排针 SMT H4.3 2X6P包装图

REV: A1

SHEET: 2/2